ISAMU

NAHTRANG DISSENY 2010

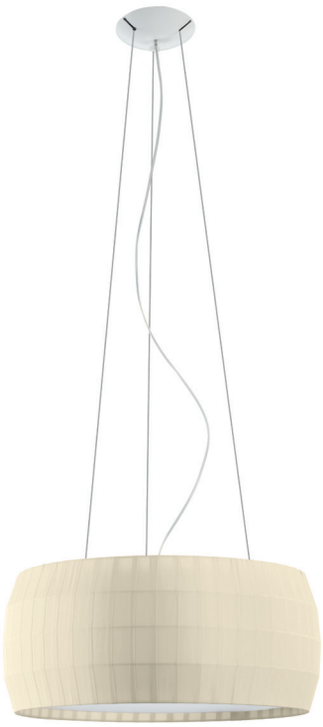

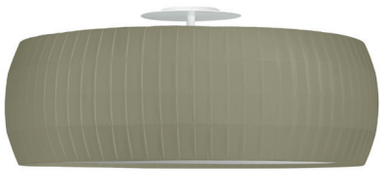

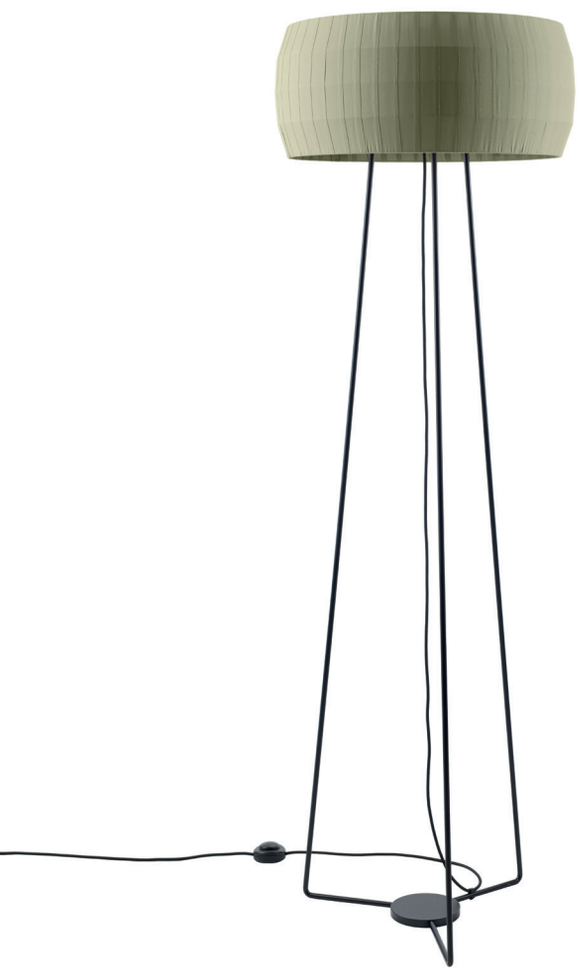

CARPYEN
BARCELONA

Carpyellum70 S.L.
C/ Pere IV 78-84 E-08005 Barcelona
T +34 93 320 99 90

Spain: comercial@carpyen.com
Export: export@carpyen.com
Special project: antony@carpyen.com

ISAMU FLOOR LAMP

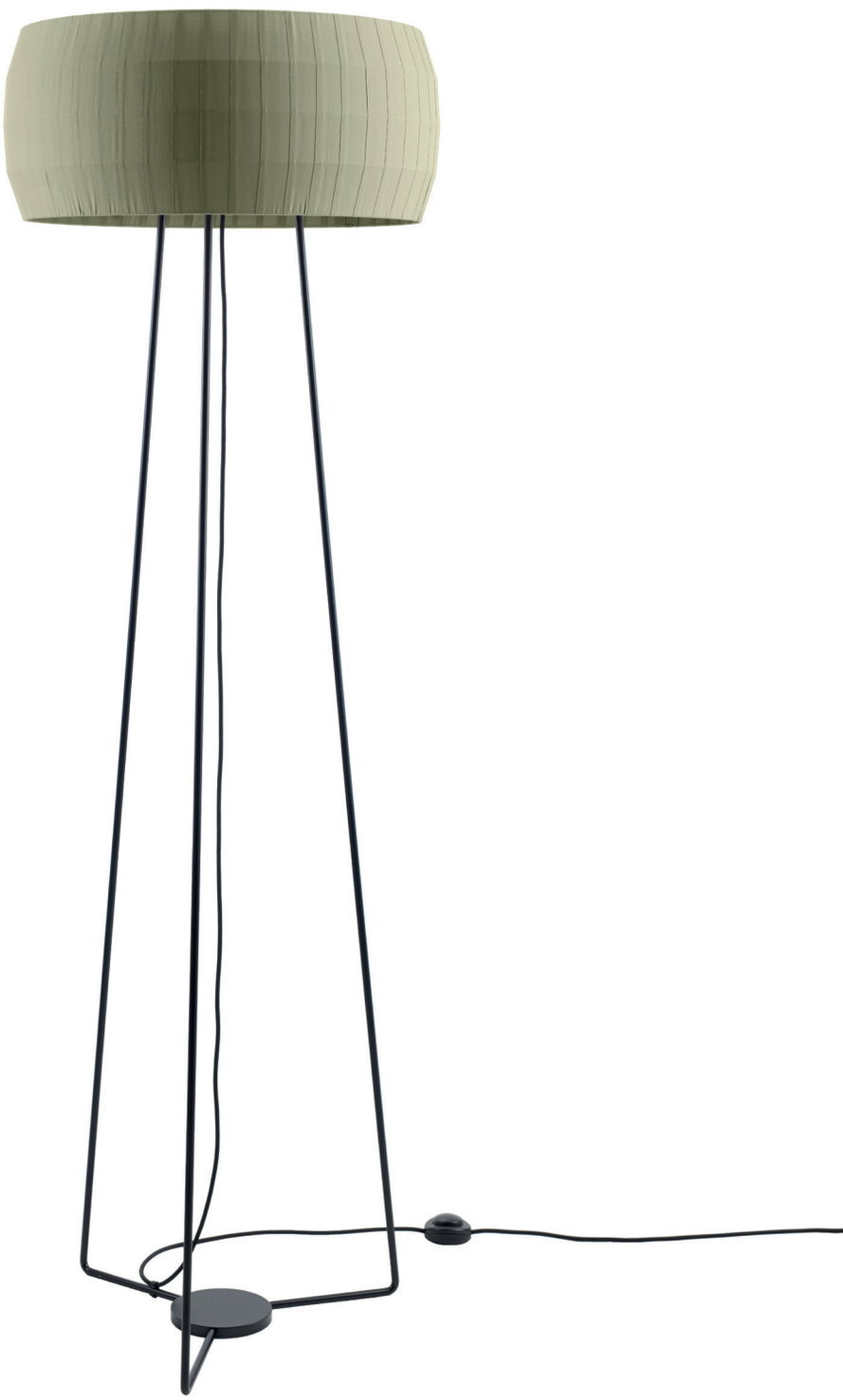

CARPYEN
BARCELONA

Carpyellum70 S.L.
C/ Pere IV 78-84 E-08005 Barcelona
T +34 93 320 99 90

Spain: comercial@carpyen.com
Export: export@carpyen.com
Special project: antony@carpyen.com

ISAMU FLOOR LAMP

CARPYEN
BARCELONA

Carpyellum70 S.L.
C/ Pere IV 78-84 E-08005 Barcelona
T +34 93 320 99 90

Spain: comercial@carpyen.com
Export: export@carpyen.com
Special project: antony@carpyen.com

ISAMU FLOOR LAMP

Materiales / Materials
Matériaux / Matters

Metal lacado negro
Black lacquer metal
Métal noir laqué
Weiß Lackiertes Metall

Pantalla encintada
Ribboned shade
Abat-jour à ruban
Polyesterseide band schirm

Acabados / Finishes
Finitions / Ausführung

Negro
Black
Noir
Schwarz

Blanco
White
Blanc
Weiss

Perla
Pearl
Perle
Perle

Verde oliva
Olive green
Vert olive
Olivgrün

LED

Sin bombilla / Without bulb
Sans ampoule / Ohne Glühbirne
2 x E27 LED
100 W / 220-240 V / 50-60 Hz

Medidas / Measures / Mesurements / Mittengun

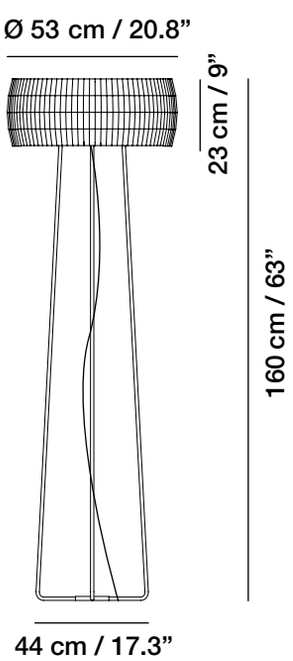

CARPYEN
BARCELONA

Carpyellum70 S.L.
C/ Pere IV 78-84 E-08005 Barcelona
T +34 93 320 99 90

Spain: comercial@carpyen.com
Export: export@carpyen.com
Special project: antony@carpyen.com

ISAMU CEILING LAMP

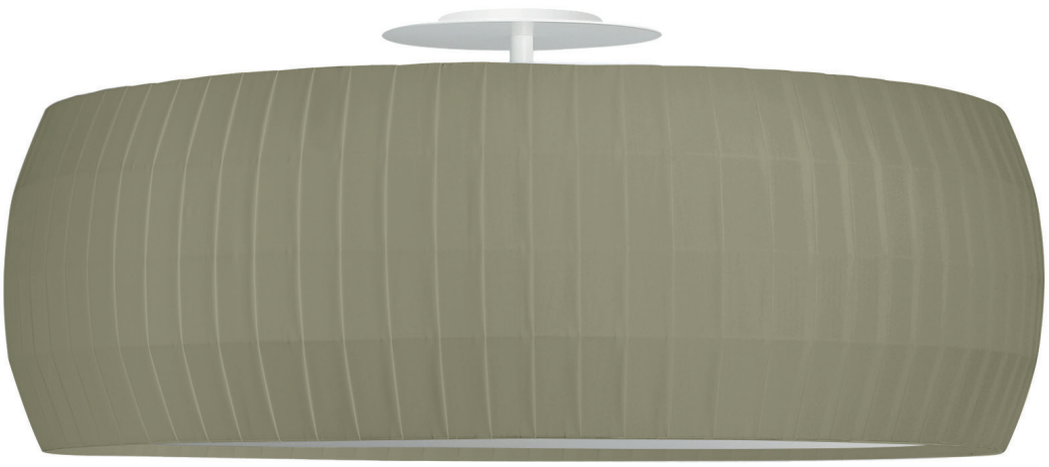

CARPYEN
BARCELONA

Carpyellum70 S.L.
C/ Pere IV 78-84 E-08005 Barcelona
T +34 93 320 99 90

Spain: comercial@carpyen.com
Export: export@carpyen.com
Special project: antony@carpyen.com

ISAMU CEILING LAMP

CARPYEN
BARCELONA

Carpyellum70 S.L.
C/ Pere IV 78-84 E-08005 Barcelona
T +34 93 320 99 90

Spain: comercial@carpyen.com
Export: export@carpyen.com
Special project: antony@carpyen.com

ISAMU CEILING LAMP

Materiales / Materials
Matériaux / Matters

Metal lacado blanco
White lacquer metal
Métal blanc laqué
Weiß Lackiertes Metall

Pantalla encintada
Ribboned shade
Abat-jour à ruban
Polyesterseide band schirm

Acabados / Finishes
Finitions / Ausführung

Blanco
White
Blanc
Weiss

Blanco
White
Blanc
Weiss

Perla
Pearl
Perle
Perle

Verde oliva
Olive green
Vert olive
Olivgrün

LED

Sin bombilla / Without bulb
Sans ampoule / Ohne Glühbirne

- Ø 53 cm / 20.8”: 2 x E27 LED
- Ø 77 cm / 30.3”: 2 x E27 LED
- Ø 118 cm / 46.5”: 4 x E27 LED

100 W / 220-240 V / 50-60 Hz

Difusor: policarbonato blanco
Difuser: white polycarbonate
Diffuseur: polycarbonate blanc
Weißen Polycarbonat-Diffusor

Sin interruptor / Without switch
Sans interrupteur / Ohne Schalter

→ • Ø53 cm / 20.8”
• Ø77 cm / 30.3”

→ • Ø 118 cm / 46.5”

Medidas / Measures / Mesurements / Mittengun

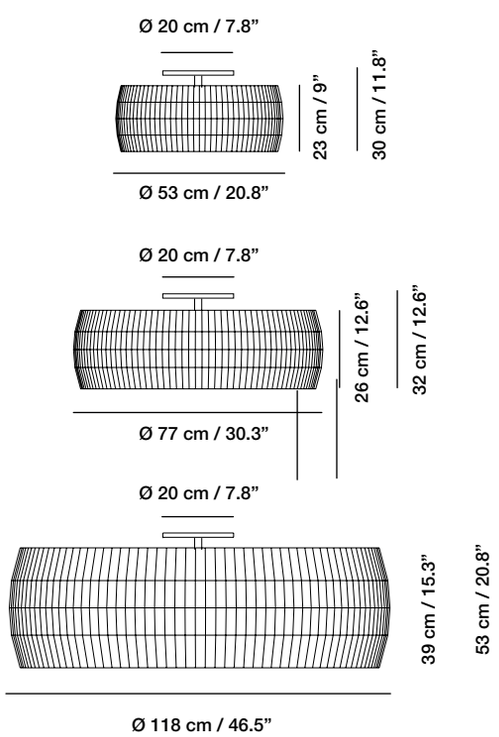

CARPYEN
BARCELONA

Carpyellum70 S.L.
C/ Pere IV 78-84 E-08005 Barcelona
T +34 93 320 99 90

Spain: comercial@carpyen.com
Export: export@carpyen.com
Special project: antony@carpyen.com

ISAMU SUSPENSION LAMP

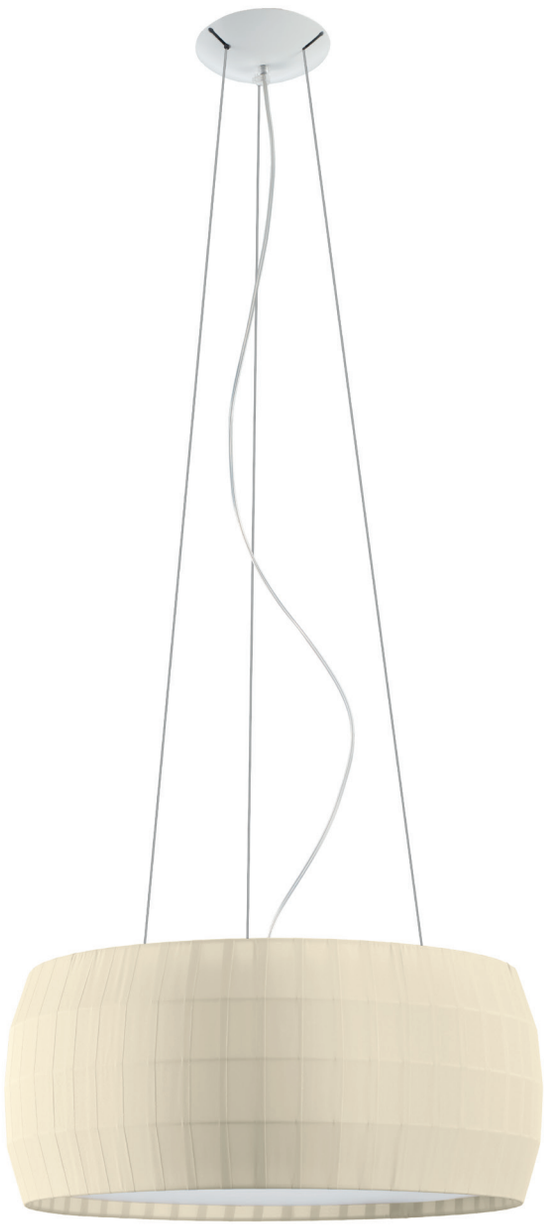

CARPYEN
BARCELONA

Carpyellum70 S.L.
C/ Pere IV 78-84 E-08005 Barcelona
T +34 93 320 99 90

Spain: comercial@carpyen.com
Export: export@carpyen.com
Special project: antony@carpyen.com

ISAMU SUSPENSION LAMP

CARPYEN
BARCELONA

Carpyellum70 S.L.
C/ Pere IV 78-84 E-08005 Barcelona
T +34 93 320 99 90

Spain: comercial@carpyen.com
Export: export@carpyen.com
Special project: antony@carpyen.com

ISAMU SUSPENSION LAMP

Materiales / Materials
Matériaux / Matters

Metal lacado blanco
White lacquer metal
Métal blanc laqué
Weiß Lackiertes Metall

Pantalla encintada
Ribboned shade
Abat-jour à ruban
Polyesterseide band schirm

Acabados / Finishes
Finitions / Ausführung

Blanco
White
Blanc
Weiss

Blanco
White
Blanc
Weiss

Perla
Pearl
Perle
Perle

Verde oliva
Olive green
Vert olive
Olivgrün

LED

Sin bombilla / Without bulb
Sans ampoule / Ohne Glühbirne

- Ø 53 cm / 20.8”: 2 x E27 LED
- Ø 77 cm / 30.3”: 2 x E27 LED
- Ø 118 cm / 46.5”: 4 x E27 LED

100 W / 220-240 V / 50-60 Hz

Difusor: policarbonato blanco
Difuser: white polycarbonate
Diffuseur: polycarbonate blanc
Weißen Polycarbonat-Diffusor

Medidas / Measures / Mesurements / Mittengun

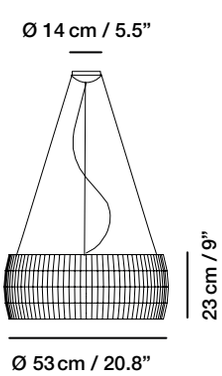

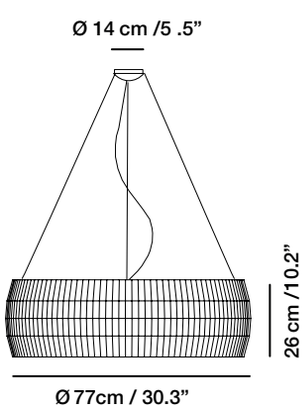

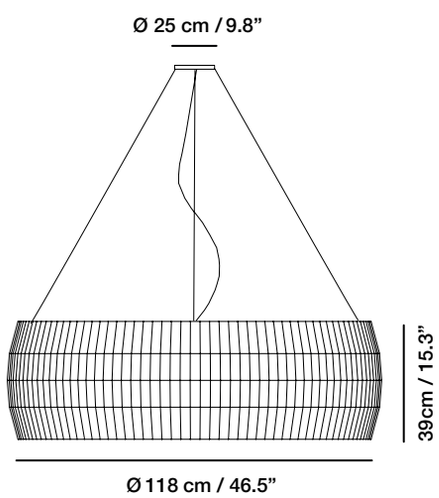

CARPYEN
BARCELONA

Carpyellum70 S.L.
C/ Pere IV 78-84 E-08005 Barcelona
T +34 93 320 99 90

Spain: comercial@carpyen.com
Export: export@carpyen.com
Special project: antony@carpyen.com

ISAMU TABLE LAMP

CARPYEN
BARCELONA

Carpyellum70 S.L.
C/ Pere IV 78-84 E-08005 Barcelona
T +34 93 320 99 90

Spain: comercial@carpyen.com
Export: export@carpyen.com
Special project: antony@carpyen.com

ISAMU TABLE LAMP

CARPYEN
BARCELONA

Carpyellum70 S.L.
C/ Pere IV 78-84 E-08005 Barcelona
T +34 93 320 99 90

Spain: comercial@carpyen.com
Export: export@carpyen.com
Special project: antony@carpyen.com

ISAMU TABLE LAMP

Materiales / Materials
Matériaux / Matters

Metal lacado negro
Black lacquer metal
Métal noir laqué
Weiß Lackiertes Metall

Pantalla encintada
Ribboned shade
Abat-jour à ruban
Polyesterseide band schirm

Acabados / Finishes
Finitions / Ausführung

Negro
Black
Noir
Schwarz

Blanco
White
Blanc
Weiss

Perla
Pearl
Perle
Perle

Verde oliva
Olive green
Vert olive
Olivgrün

LED

Sin bombilla / Without bulb
Sans ampoule / Ohne Glühbirne

2 x E27 LED
100 W / 220-240 V / 50-60 Hz

Medidas / Measures / Mesurements / Mittengun

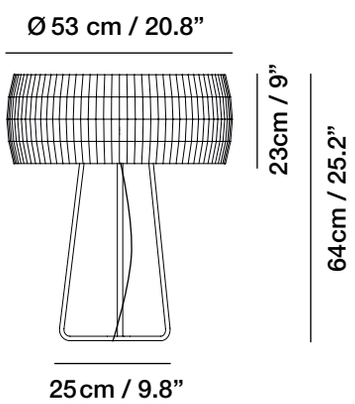

CARPYEN
BARCELONA

Carpyellum70 S.L.
C/ Pere IV 78-84 E-08005 Barcelona
T +34 93 320 99 90

Spain: comercial@carpyen.com
Export: export@carpyen.com
Special project: antony@carpyen.com