JERRY

NAHTRANG DISSENY 2012

CARPYEN
BARCELONA

Carpyellum70 S.L.
C/ Pere IV 78-84 E-08005 Barcelona
T +34 93 320 99 90

Spain: comercial@carpyen.com
Export: export@carpyen.com
Special project: antony@carpyen.com

JERRY FLOOR LAMP

CARPYEN
BARCELONA

Carpyellum70 S.L.
C/ Pere IV 78-84 E-08005 Barcelona
T +34 93 320 99 90

Spain: comercial@carpyen.com
Export: export@carpyen.com
Special project: antony@carpyen.com

JERRY FLOOR LAMP

CARPYEN
BARCELONA

Carpyellum70 S.L.
C/ Pere IV 78-84 E-08005 Barcelona
T +34 93 320 99 90

Spain: comercial@carpyen.com
Export: export@carpyen.com
Special project: antony@carpyen.com

JERRY FLOOR LAMP

Materiales / Materials
Matériaux / Matters

Estructura: metal
Structure: metal
Structure: métal
Struktur: Metall

Pantalla: algodón
Shade: cotton
Abat-jour: coton
Schirm: Baumwolle

Acabados / Finishes
Finitions / Ausführung

Níquel mate
Matt nickel
Nickel mat
Nickel matt

Negro
Black
Noir
Schwarz

Blanco
White
Blanc
Weiss

Beige
Beige
Beige
Beige

Blanco
White
Blanc
Weiss

LED

Sin bombilla / Without bulb /
Sans ampoule / Ohne Glühbirne

2 x E27 LED
100 W / 220-240 V / 50-60 Hz

Medidas / Measures / Mesurements / Mittengun

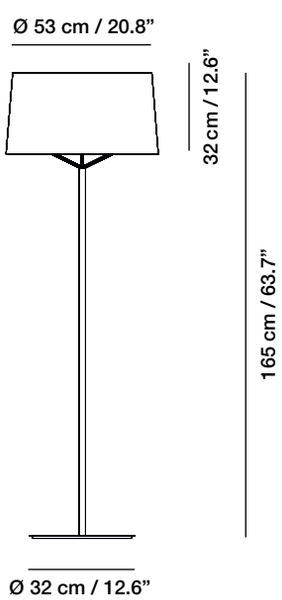

CARPYEN
BARCELONA

Carpyellum70 S.L.
C/ Pere IV 78-84 E-08005 Barcelona
T +34 93 320 99 90

Spain: comercial@carpyen.com
Export: export@carpyen.com
Special project: antony@carpyen.com

JERRY TABLE LAMP

CARPYEN
BARCELONA

Carpyellum70 S.L.
C/ Pere IV 78-84 E-08005 Barcelona
T +34 93 320 99 90

Spain: comercial@carpyen.com
Export: export@carpyen.com
Special project: antony@carpyen.com

JERRY TABLE LAMP

CARPYEN
BARCELONA

Carpyellum70 S.L.
C/ Pere IV 78-84 E-08005 Barcelona
T +34 93 320 99 90

Spain: comercial@carpyen.com
Export: export@carpyen.com
Special project: antony@carpyen.com

JERRY TABLE LAMP

Materiales / Materials
Matériaux / Matters

Estructura: metal
Structure: metal
Structure: métal
Struktur: Metall

Pantalla: algodón
Shade: cotton
Abat-jour: coton
Schirm: Baumwolle

Estructura negra únicamente con pantalla blanca / Black structure with white shade only / Structure noire uniquement avec abat-jour blanc / Schwarz Struktur mit nur weiss Schirm

Acabados / Finishes
Finitions / Ausführung

Níquel mate
Matt nickel
Nickel mat
Nickel matt

Negro
Black
Noir
Schwarz

Blanco
White
Blanc
Weiss

Beige
Beige
Beige
Beige

Blanco
White
Blanc
Weiss

LED

Sin bombilla / Without bulb / Sans ampoule / Ohne Glühbirne

- Pequeño:
1 x E27 LED
60 W / 220-240 V / 50-60 Hz
- Grande:
2 x E27 LED
100 W / 220-240 V / 50-60 Hz

Medidas / Measures / Mesurements / Mittengun

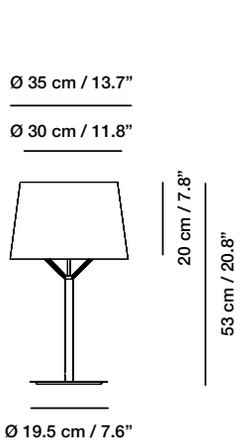

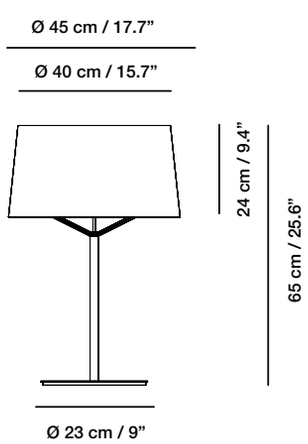

CARPYEN
BARCELONA

Carpyellum70 S.L.
C/ Pere IV 78-84 E-08005 Barcelona
T +34 93 320 99 90

Spain: comercial@carpyen.com
Export: export@carpyen.com
Special project: antony@carpyen.com

JERRY WALL LAMP

CARPYEN
BARCELONA

Carpyellum70 S.L.
C/ Pere IV 78-84 E-08005 Barcelona
T +34 93 320 99 90

Spain: comercial@carpyen.com
Export: export@carpyen.com
Special project: antony@carpyen.com

JERRY WALL LAMP

Materiales / Materials
Matériaux / Matters

Metal
Metal
Métal
Metall

Acabados / Finishes
Finitions / Ausführung

Níquel mate
Matt nickel
Nickel mat
Nickel matt

Negro
Black
Noir
Schwarz

Blanco
White
Blanc
Weiss

Cromo
Chrome
Chrome
Chrom

LED Integrado / Integrated /
Intégré / Integriert

2 W 100 Lumen 3000 K
color cálido / warm colour
coleur chaude / warmes licht

Ángulo de apertura 80º
80º lighting angle
Angle d'ouverture de 80º
Abstrahlwinkel 80º

Foco giratorio 360º
360º rotating focus
360º giratoire
Rotierende spot 360º

Medidas / Measures / Mesurements / Mittengun

EMPOTRADA / BUILD IN
Sin interruptor / Without switch

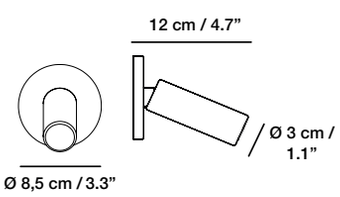

Con interruptor / With switch

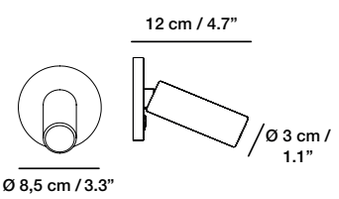

SUPERFICIE / SURFACE
Con interruptor / With switch

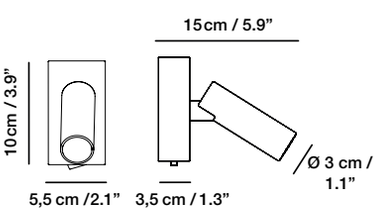

CARPYEN
BARCELONA

Carpyellum70 S.L.
C/ Pere IV 78-84 E-08005 Barcelona
T +34 93 320 99 90

Spain: comercial@carpyen.com
Export: export@carpyen.com
Special project: antony@carpyen.com