REBOUND

DAN
YEFFET
2020

CARPYEN
BARCELONA

Carpyellum70 S.L.
C/ Pere IV 78-84 E-08005 Barcelona
T +34 93 320 99 90

Spain: comercial@carpyen.com
Export: export@carpyen.com
Special project: antony@carpyen.com

REBOUND SUSPENSION LAMP

CARPYEN
BARCELONA

Carpyellum70 S.L.
C/ Pere IV 78-84 E-08005 Barcelona
T +34 93 320 99 90

Spain: comercial@carpyen.com
Export: export@carpyen.com
Special project: antony@carpyen.com

REBOUND SUSPENSION LAMP

CARPYEN
BARCELONA

Carpyellum70 S.L.
C/ Pere IV 78-84 E-08005 Barcelona
T +34 93 320 99 90

Spain: comercial@carpyen.com
Export: export@carpyen.com
Special project: antony@carpyen.com

REBOUND SUSPENSION LAMP

CARPYEN
BARCELONA

Carpyellum70 S.L.
C/ Pere IV 78-84 E-08005 Barcelona
T +34 93 320 99 90

Spain: comercial@carpyen.com
Export: export@carpyen.com
Special project: antony@carpyen.com

REBOUND SUSPENSION LAMP

CARPYEN
BARCELONA

Carpyellum70 S.L.
C/ Pere IV 78-84 E-08005 Barcelona
T +34 93 320 99 90

Spain: comercial@carpyen.com
Export: export@carpyen.com
Special project: antony@carpyen.com

REBOUND SUSPENSION LAMP

Materiales / Materials
Matériaux / Matters

Estructura: piedra
Structure: stone
Structure: pierre
Struktur: Stein

Difusor: latón y cuero
Diffuser: brass and leather
Diffuseur: cuir et laiton
Diffusor: messing und Leder

Acabados / Finishes
Finitions / Ausführung

Travertino
Travertine
Travertin
Travertin

Mármol blanco
White marble
Marbre blanc
Weißer Marmor

Mármol verde
Green marble
Marbre vert
Grüner Marmor

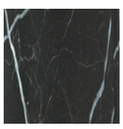

Cobre mate
Matt copper
Cuivre mat
Mattes kupfer

Pantallas / Shades
Abat-jours /

Latón y Cuero Marrón
Brass and Leather Brown
Laiton et Cuir Marron
Messing und Leder Braun

Latón
Brass
Laiton
Messing

Latón
Brass
Laiton
Messing

Latón y Cuero Negro
Brass and Leather Black
Laiton et Cuir Noir
Messing und Leder Schwarz

LED

GU10 LED
9 W / 220-240 V / 50-60 Hz
880 Lumen / 3000 K / CRI 80

Bombilla LED incluida
LED bulb included
Ampoule LED incluse
Inklusive LED-Birne

Medidas / Measures / Mesurements / Mittengun

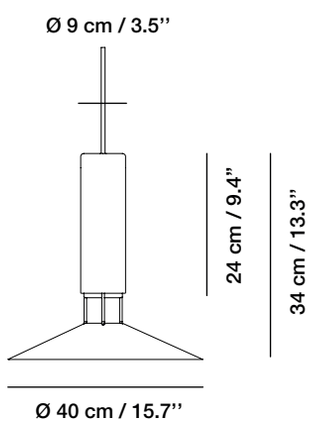

CARPYEN
BARCELONA

Carpyellum70 S.L.
C/ Pere IV 78-84 E-08005 Barcelona
T +34 93 320 99 90

Spain: comercial@carpyen.com
Export: export@carpyen.com
Special project: antony@carpyen.com

REBOUND TABLE LAMP

CARPYEN
BARCELONA

Carpyellum70 S.L.
C/ Pere IV 78-84 E-08005 Barcelona
T +34 93 320 99 90

Spain: comercial@carpyen.com
Export: export@carpyen.com
Special project: antony@carpyen.com

REBOUND TABLE LAMP

CARPYEN
BARCELONA

Carpyellum70 S.L.
C/ Pere IV 78-84 E-08005 Barcelona
T +34 93 320 99 90

Spain: comercial@carpyen.com
Export: export@carpyen.com
Special project: antony@carpyen.com

REBOUND TABLE LAMP

CARPYEN
BARCELONA

Carpyellum70 S.L.
C/ Pere IV 78-84 E-08005 Barcelona
T +34 93 320 99 90

Spain: comercial@carpyen.com
Export: export@carpyen.com
Special project: antony@carpyen.com

REBOUND TABLE LAMP

CARPYEN
BARCELONA

Carpyellum70 S.L.
C/ Pere IV 78-84 E-08005 Barcelona
T +34 93 320 99 90

Spain: comercial@carpyen.com
Export: export@carpyen.com
Special project: antony@carpyen.com

REBOUND TABLE LAMP

Materiales / Materials
Matériaux / Matters

Estructura: piedra
Structure: stone
Structure: pierre
Struktur: Stein

Difusor: latón y cuero
Diffuser: brass and leather
Diffuseur: cuir et laiton
Diffusor: messing und Leder

Acabados / Finishes
Finitions / Ausführung

Travertino
Travertine
Travertin
Travertin

Mármol blanco
White marble
Marbre blanc
Weißer Marmor

Mármol verde
Green marble
Marbre vert
Grüner Marmor

Cobre mate
Matt copper
Cuivre mat
Mattes kupfer

Pantallas / Shades
Abat-jours /

Latón y Cuero Marrón
Brass and Leather Brown
Laiton et Cuir Marron
Messing und Leder Braun

Latón
Brass
Laiton
Messing

Latón
Brass
Laiton
Messing

Latón y Cuero Negro
Brass and Leather Black
Laiton et Cuir Noir
Messing und Leder Schwarz

LED

GU10 LED
9 W / 220-240 V / 50-60 Hz
880 Lumen / 3000 K / CRI 80

Bombilla LED incluida
LED bulb included
Ampoule LED incluse
Inklusive LED-Birne

Medidas / Measures / Mesurements / Mittengun

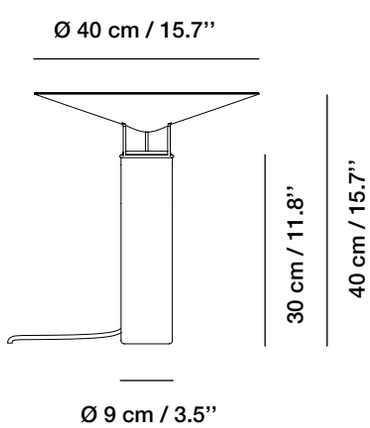

CARPYEN
BARCELONA

Carpyellum70 S.L.
C/ Pere IV 78-84 E-08005 Barcelona
T +34 93 320 99 90

Spain: comercial@carpyen.com
Export: export@carpyen.com
Special project: antony@carpyen.com